Engine Mounts

By Alan Bromfield

I have suspected that my engine might be sitting higher. It is 1/2" higher when compared it to a friend's engine that was installed approx. 10 years ago with new rubber. Of course, I would expect mine to settle some but the rubber in newer engine mounts may not settle with the weight of the engine to enable proper clearance. In my experience the problem arises because the large rubber engine mounts are slightly thicker than originals and also the two metal backing plates are bonded to the sandwich slightly offset to each other.

I'm not convinced that these new rubbers will settle very much. A sixteenth maybe but not the half inch plus you are looking for. My solution was a bit different and can best be explained with the following pictures.

The clearance for the rebound rubber to the top of the engine mount rubber is 1/22" (see Clearance) and you are expected to shim that down to reduce the gap. The gap is enormous and will take more than shims! 1/22" is less than 1mm and any settling in the engine mount would use up that gap very quickly. It certainly wouldn't settle further once the gap had closed completely. The diagonal offset I mentioned in the engine mount block, presents an edge to the rebound rubber and not the pair of metal plates that would be expected if the plates were parallel. My fix came in two parts.

First I ground off the top edge of the high plate, taking a sliver of rubber with it, until the top edge of the block was truly square and flat. I then filed the holes in parts 5 and 17 (see Assembly or Plate AK in the parts list) elongating them until I could assemble with the 1/22" gap needed. Bolt the whole thing up tight using self locking nuts as you won't see those nuts ever again.

The result was an engine that sat at the correct height. I know many will have reservations about slotted holes but it worked for me.

Additional photos follow the drawings.

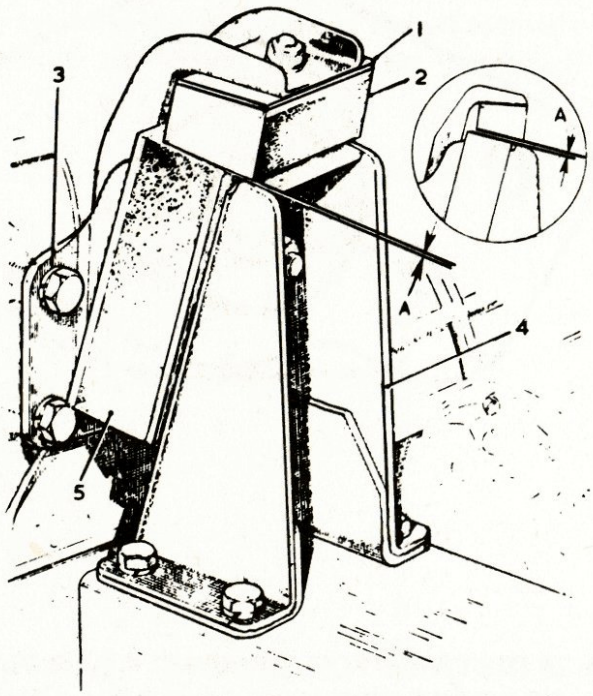

Fig 1.34 CORRECT SETTING FOR THE FRONT ENGINE MOUNTING (EARLY TYPE)

1 Shims
2 Rebound buffer
3 Mounting bracket on crank-
4 Front mounting bracket
5 Mounting rubber
A 1/22 inch (0.8 mm) clearance

Clearance

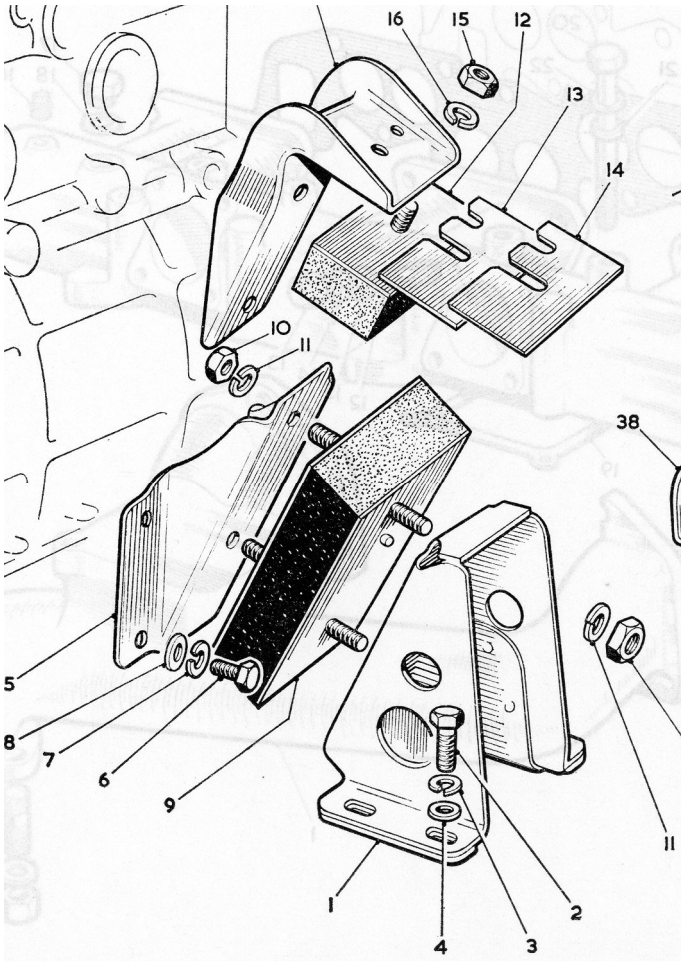

Assembly

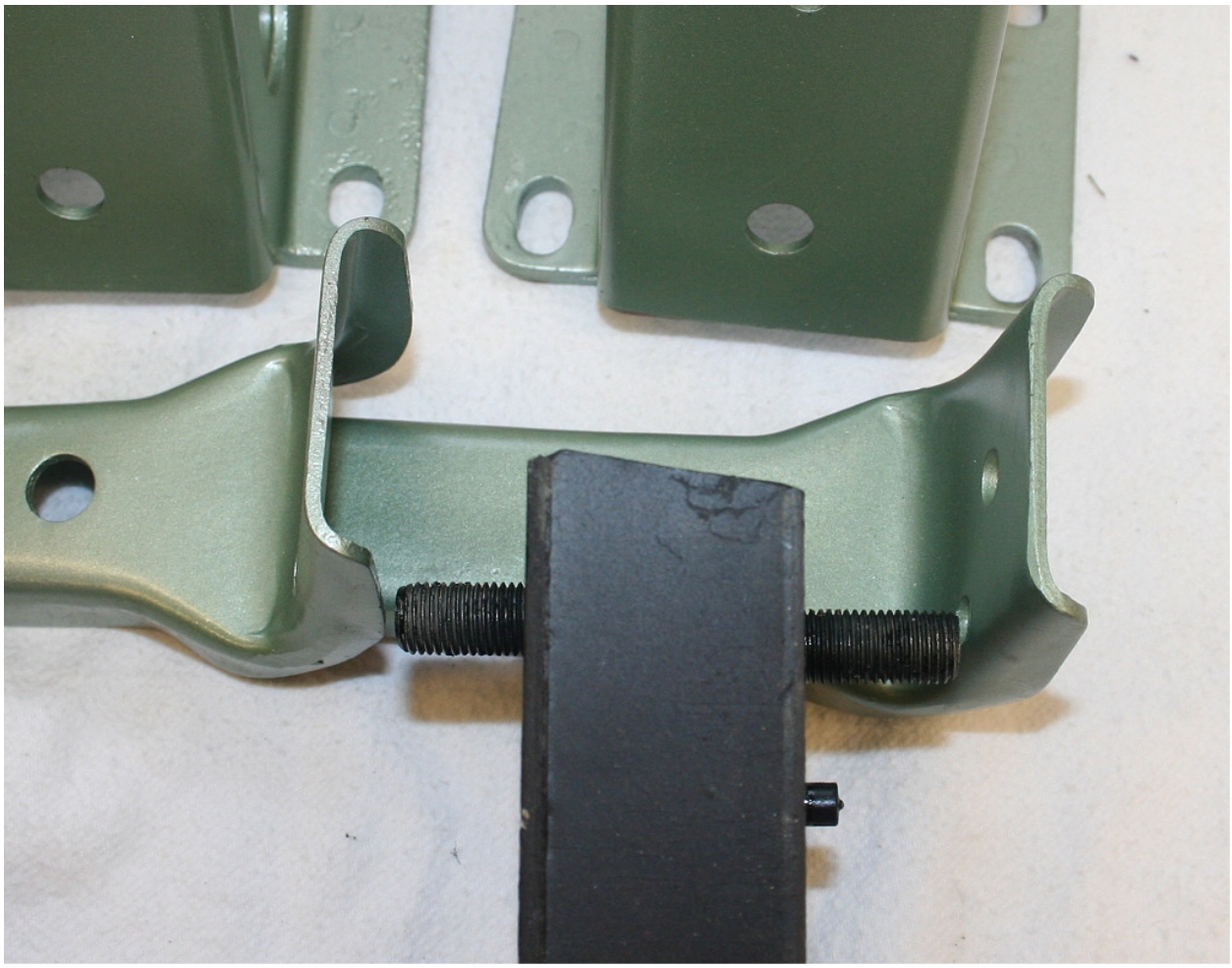

R.H

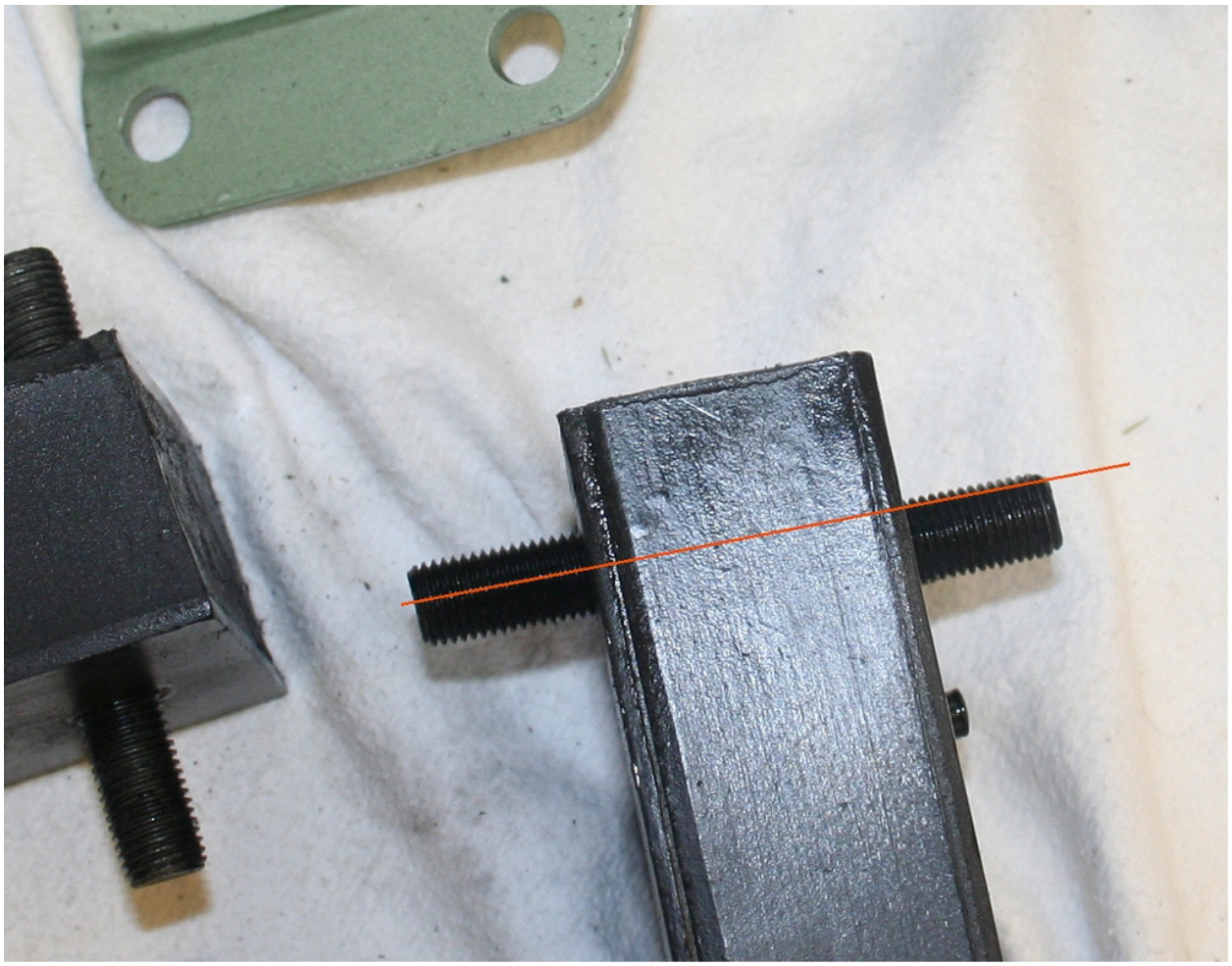

R.H

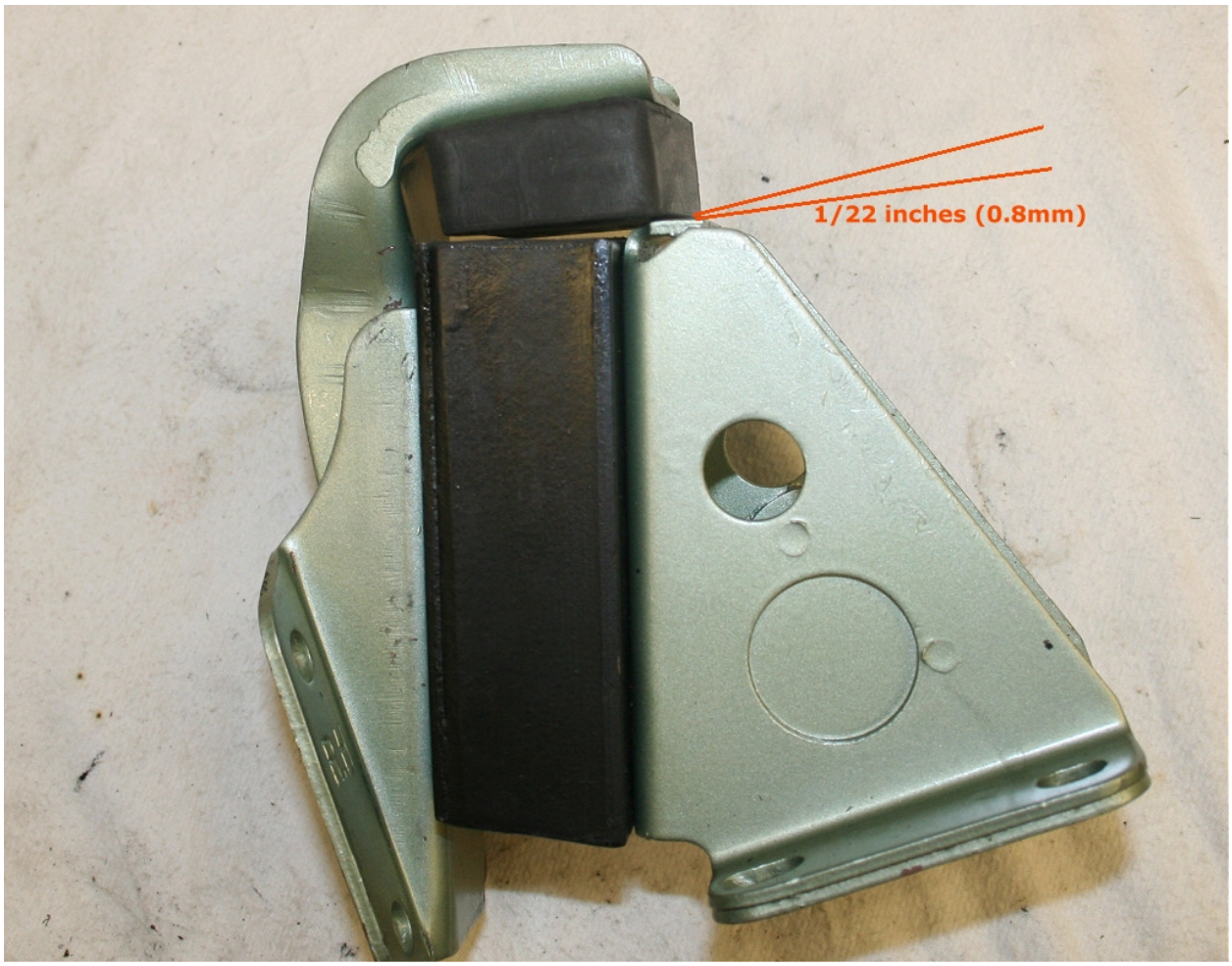
1/22 inches (0.8mm)

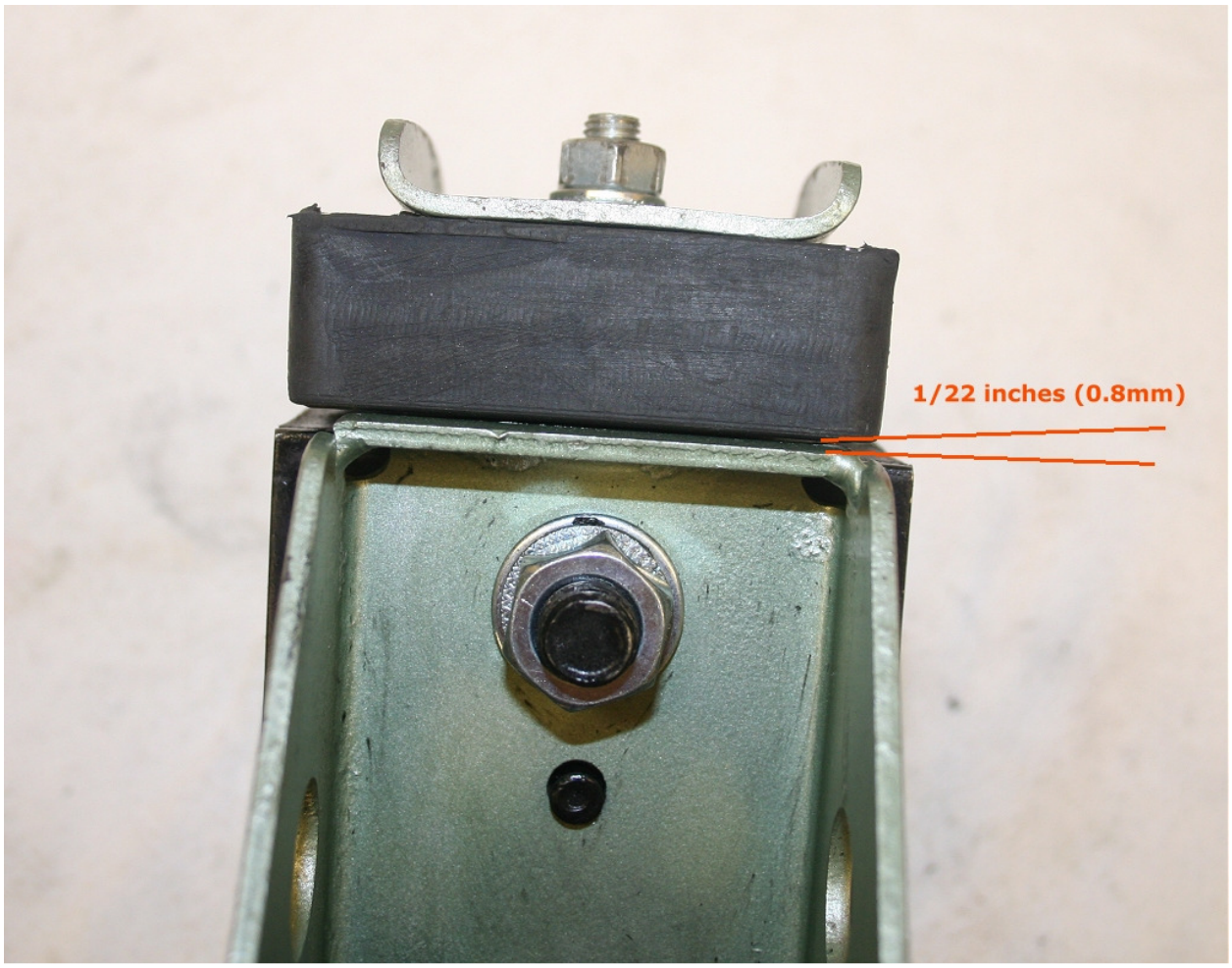
1/22 inches (0.8mm)